RSi SMARTCAP™ | FITMENT INSTRUCTIONS

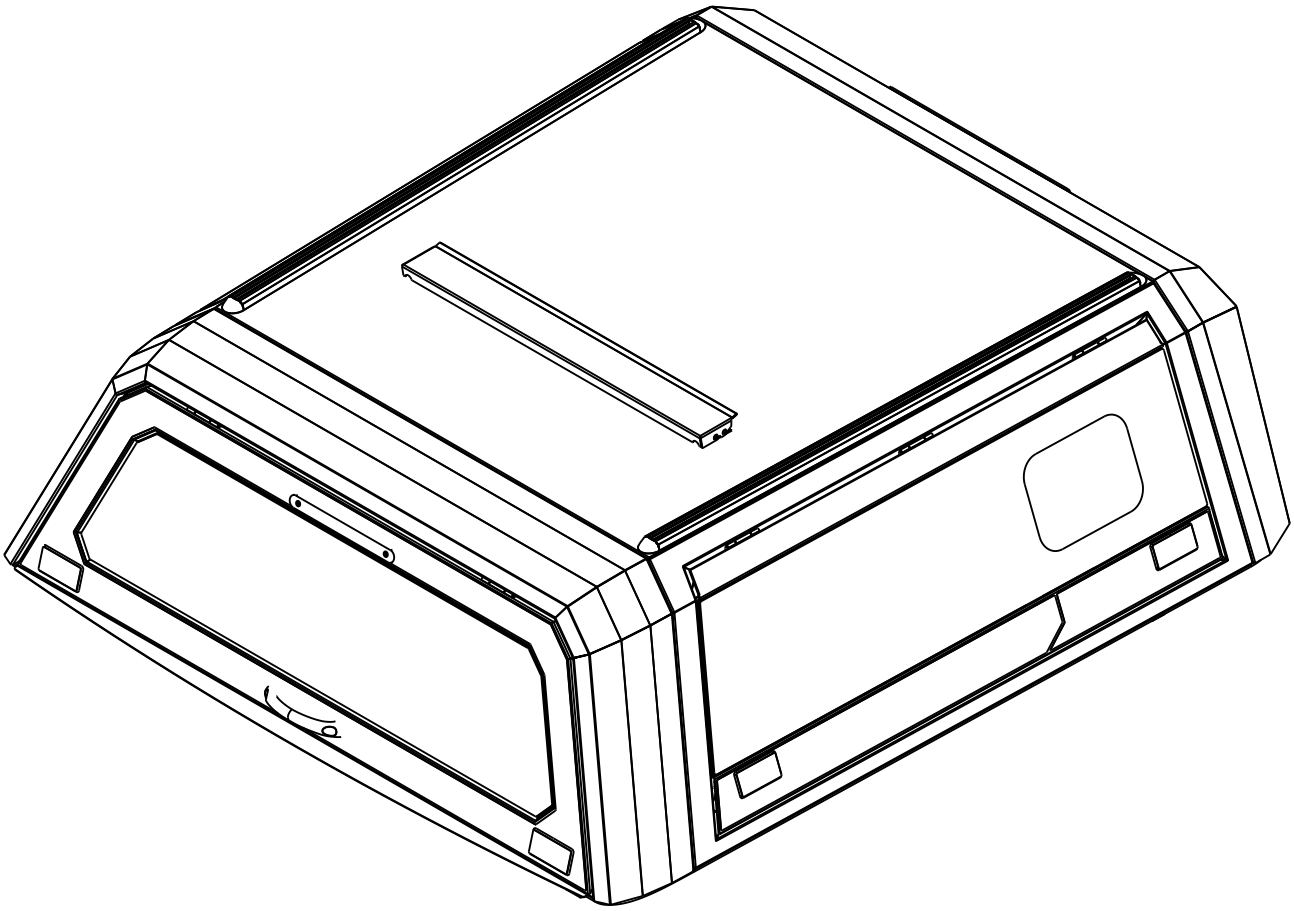

FITMENT INSTRUCTIONS

FOR FITMENT TO:

2019-CURRENT CHEVROLET SILVERADO - GMC SIERRA 1500 (NEW BODY STYLE) 5.8'' SMARTCAP EVO

FOLLOW THE INSTRUCTIONS CAREFULLY TO AVOID DAMAGE TO COMPONENTS OR THE VEHICLE

RSISMARTCAP.COM - SUPPORT@RSISMARTCAP.COM - NORTH AMERICA

FITMENT KIT CONTENTS

FITMENT KIT CONTENT (HARDWARE)

DESCRIPTION	QTY	EXAMPLE
CLAMPS	6	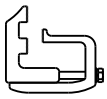
WIRE HARNESS (BRAKE LIGHT)	1	
THIN RUBBER PAD	6	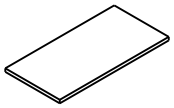
10MM RUBBER PAD	6	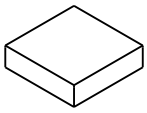
5MM X 30MM FOAM SEAL TAPE	1	

REQUIRED TOOLS

CATEGORY	TOOLS	EXAMPLE
Socket Wrench	13MM SOCKET	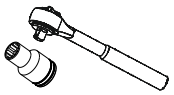
Combination Wrench	13MM FLAT	
Torque Wrench	13MM SOCKET	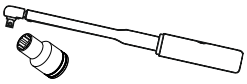

PLEASE ADHERE TO BELOW TO PREVENT DAMAGE TO TRUCK AND RSI SMARTCAP DURING FITMENT

WARNING

1. ONLY USE THE RECOMMENDED TOOLS AS INDICATED IN THE FITMENT INSTRUCTION ABOVE
2. ONLY USE THE HARDW ARE PROVIDED IN THE FITMENT KIT OUTLINED ABOVE.
3. HANDLE ALL RSI SMARTCAP FITMENT COMPONENTS WITH CARE UPON UNPACKING.
4. IT IS RECOMMENDED THAT THE MINIMUM OF FOUR PEOPLE ARE USED TO LIFT THE RSI SMARTCAP.
5. NEVER USE ACETONE ON PAINTWORK

FITMENT OF THE RSI SMARTCAP TO TRUCK

STEP ONE

1. REMOVE THE BACKING TAPE FROM THE FOAM STRIP. (SEE FIGURE 1)
2. APPLY FOAM STRIP ON THE FRONT LIP OF THE PICK UP BOX TO ACCOUNT FOR ANY HEIGHT DIFFERENCES BETWEEN THE PICKUP BOX SIDES AND THE FRONT PICKUP BOX PANEL. (SEE FIGURE 2)
3. CUT TO LENGTH (SEE FIGURE 3)

FIGURE 1

1. FOAM STRIP
2. ADHESIVE
3. ADHESIVE BACKING

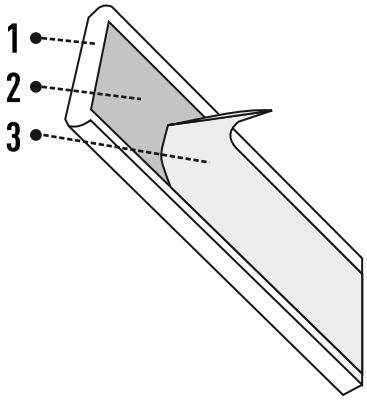

FIGURE 2

FOAM STRIP
FRONT PICKUP BOX PANEL

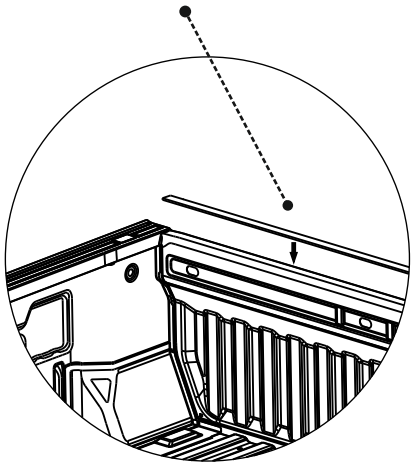

FIGURE 3

FOAM STRIP
TRIM EXCESS FOAM STRIP

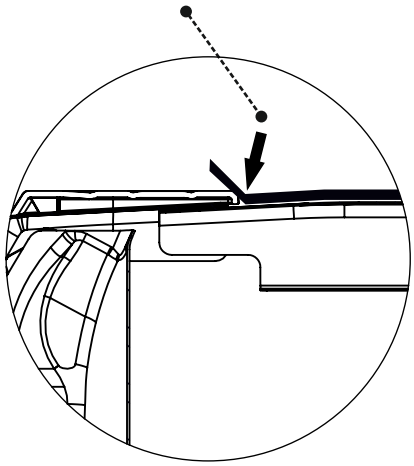

STEP TWO

1. A MINIMUM OF FOUR PEOPLE ARE RECOMMENDED TO PICK UP AND PLACE THE RSI SMARTCAP ONTO THE TRUCK.
2. ONCE THE RSI SMART CAP IS CENTERED, PLACE CLAMPS IN THE POSITIONS. (SEE FIGURE 3)
3. PLACE THE SUPPLIED THIN RUBBER PAD ON THE SIDE PANEL TO PREVENT CLAMP FROM SCRATCHING THE PAINT.
4. PLACE THE 10MM RUBBER PAD UNDER THE SIDE PANEL, BETWEEN THE PICKUP BOX AND THE RSI SMARTCAP, WHERE CLAMP IS COMPRESSING. (SEE FIGURE 4)
5. ONCE THE RUBBER SPACERS ARE IN PLACE UNDER EVERY CLAMP, PROCEED TO SUFFICIENTLY FASTEN THE CLAMPS TO 9 FT-LB.

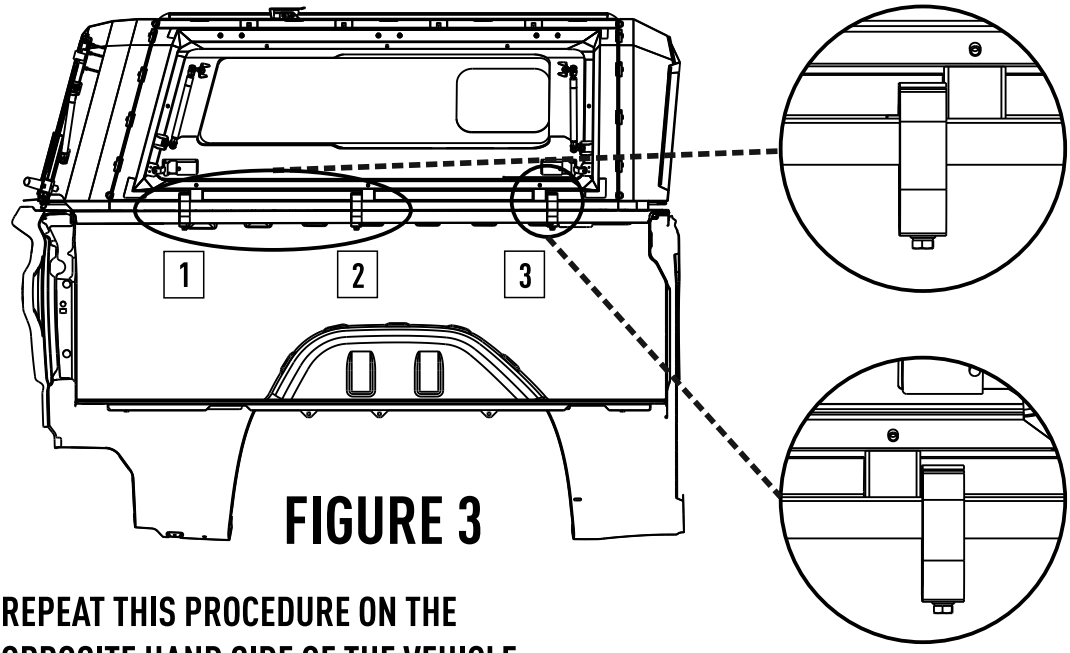

FIGURE 3

REPEAT THIS PROCEDURE ON THE OPPOSITE HAND SIDE OF THE VEHICLE

FITMENT OF THE RSI SMARTCAP TO TRUCK

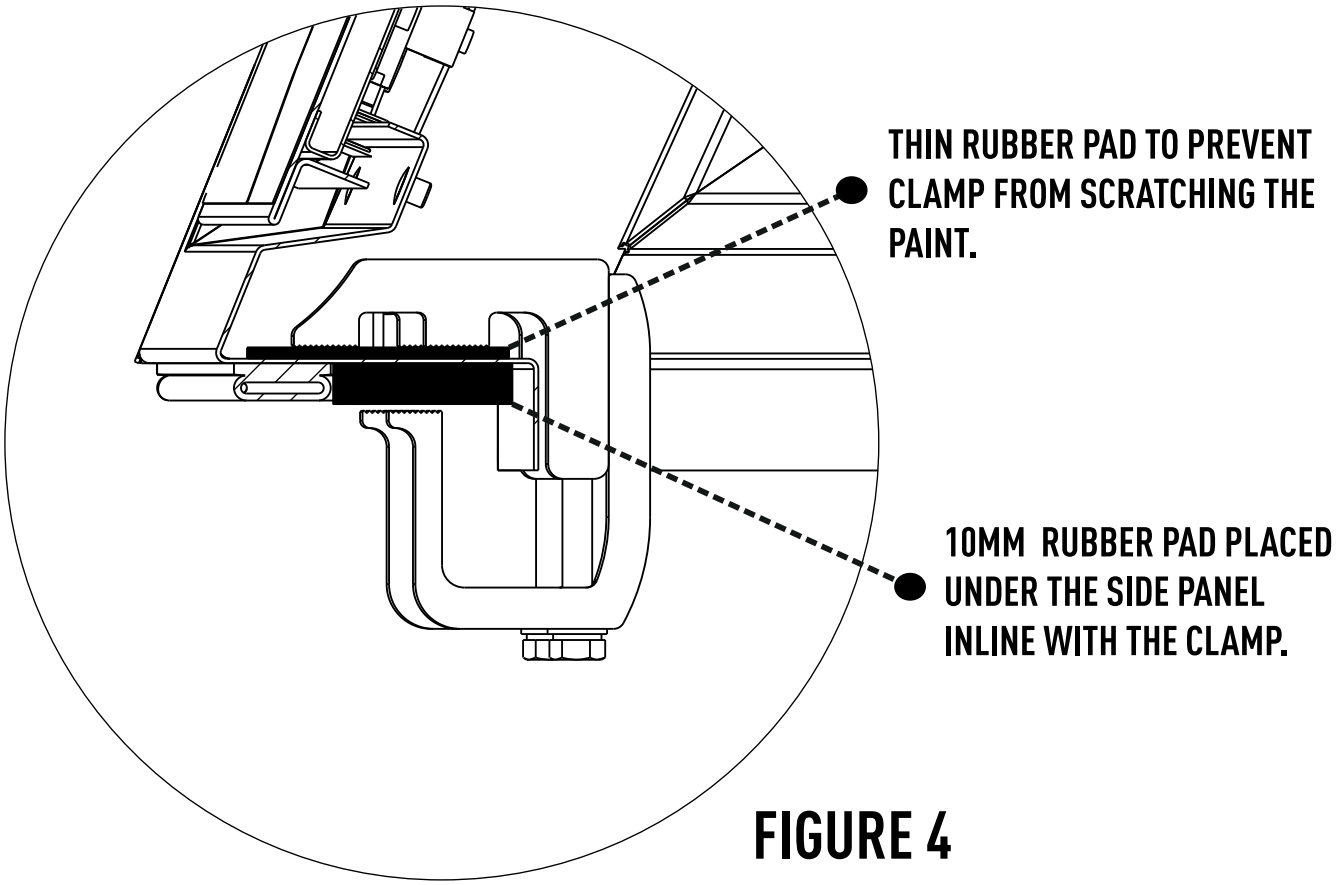

FIGURE 4

STEP THREE

1. PLUG IN THE WIRE HARNESS INTO THE EXTENSION HARNESS SUPPLIED WITH THE RSI SMARTCAP. (SEE FIGURE 5)
2. **REFER TO HARNESS CONNECTING INSTRUCTIONS TO PLUG INTO VEHICLE.**

FIGURE 5

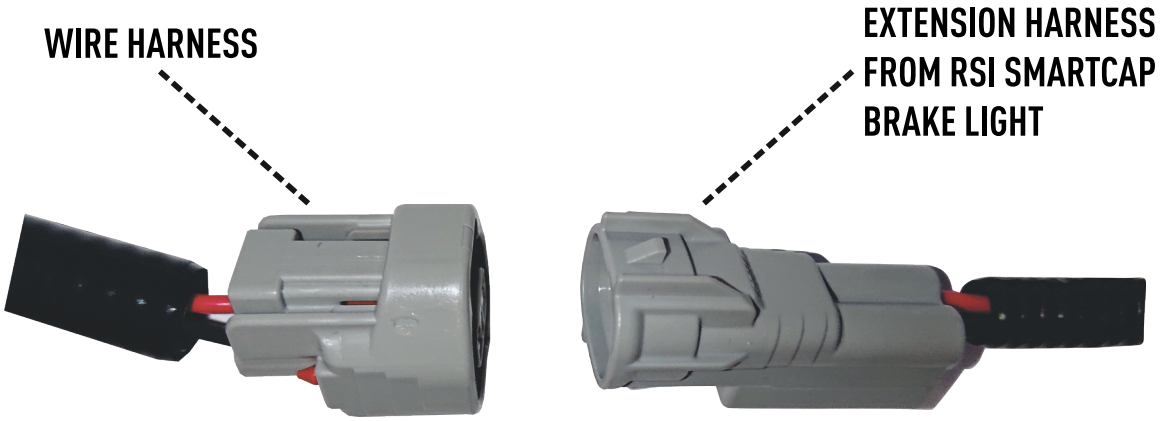

THANK YOU FOR PURCHASING YOUR RSI SMARTCAP
SHOULD YOU HAVE ANY ENQUIRIES ABOUT THE FITMENT, FEEL FREE TO CONTACT US

775 636 9664 SUPPORT@RSISMARTCAP.COM RSISMARTCAP.COM